PARTS LIST

FOUR SPEED AUTOMATIC GEARBOX

ROLLS-ROYCE

BENTLEY

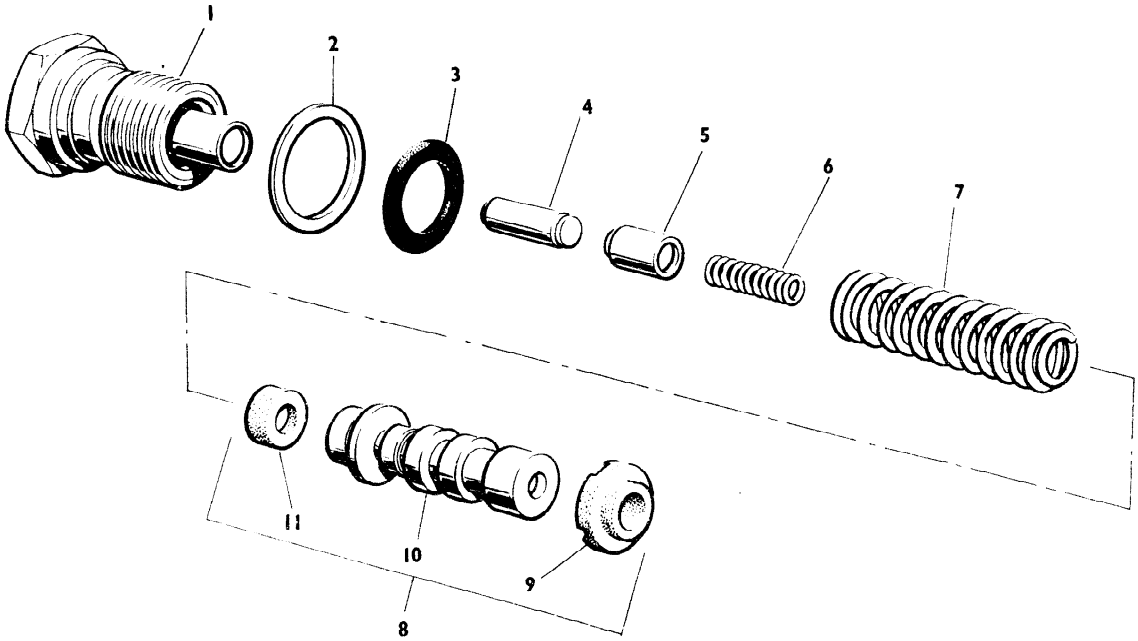

Ref.	Part No	Description	No. off	Remarks
1	UG 500	PLUG-Pressure Regulator-Assembly	1	
2	UG 294	GASKET-Pressure Regulator Plug	1	
3	UG 128	RING-Sealing-Pressure Regulator Plug	1	
4	UG 636	PLUG-T.V. Pressure	1	
5	UG 519	PLUG-Reverse Booster	1	
6	UG 752	SPRING-Damper-Regulator Valve	1	
7	UG 741	SPRING-Regulator Valve	1	All Gearbox Series C. to SM. inclusive.
-	UG 3837	SPRING-Regulator Valve	1	Gearbox Series T.
8	UG 503	VALVE and CUSHION-Assembly	1	
9	UG 455	CUSHION-Inner	1	
10	UG 442	VALVE-Pressure Regulator	1	
11	UG 464	CUSHION-Outer	1	

Ref.	Part No.	Description	No. off	Remarks

CHASSIS No's.

GEARBOX SERIES C. C-C. C-E. C-E8. C-P. C-PC. C-SW. C-SWM. SM. SM-C. T.

Items marked * indicate modification changes from previous list/s

Items marked † are not supplied as individual parts

PRESSURE REGULATOR

Printed in England